

Heidi

No. 1514-301 LAF SOFA
W 88 D 46 H 31 in.
Seat depth 22 in.
Seat height 18 in.
Arm height 19 - 24 in.

No. 1514-210 CURVED CORNER
W 58 D 36 H 31 in.
Seat depth 22 in.
Seat height 18 in.

No. 1514-212 RIGHT CHAISE
W 89 D 47 H 31 in.
Seat depth 22 in.
Seat height 18 in.

Legs are Solid Maple. Available in any
TC wood finish on Maple – must specify.
Black Walnut on Maple shown.
Throw pillows optional – must specify.
Fabric shown: 5-2365-10.

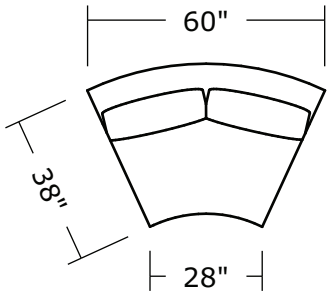

1514-210
Curve

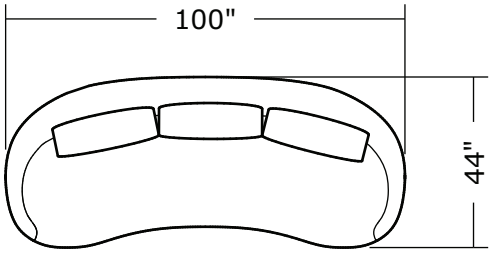

1514-303
Sofa

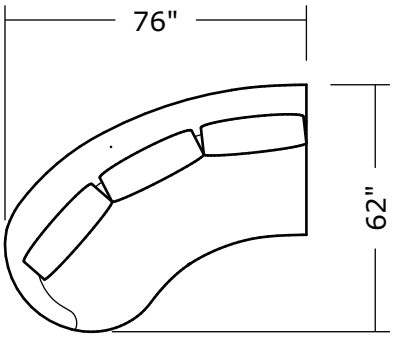

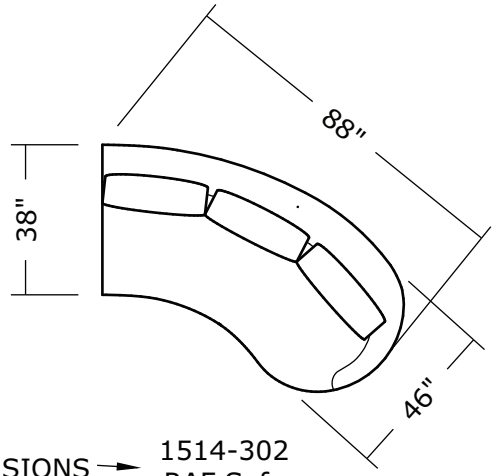

1514-301
LAF Sofa ← SAME DIMENSIONS → 1514-302
RAF Sofa

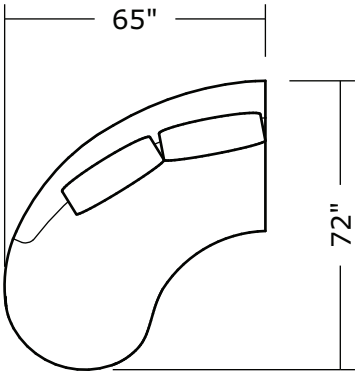

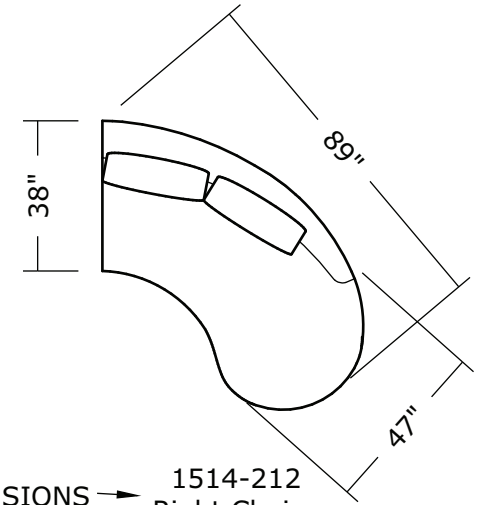

1514-211
Left Chaise ← SAME DIMENSIONS → 1514-212
Right Chaise

Heidi
1514 - Series

Scale 1/4" = 1'0"
All upholstery sizes are approximate

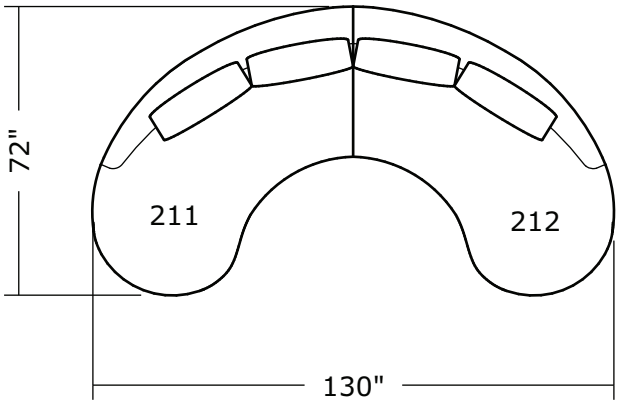

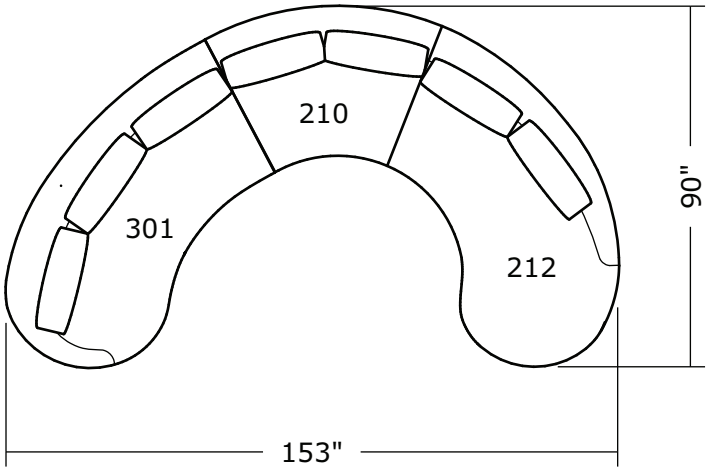

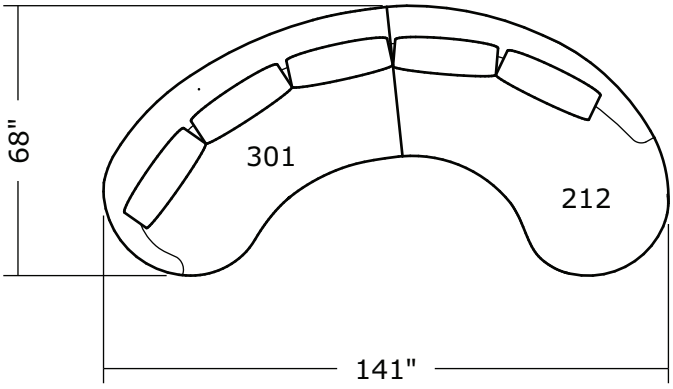

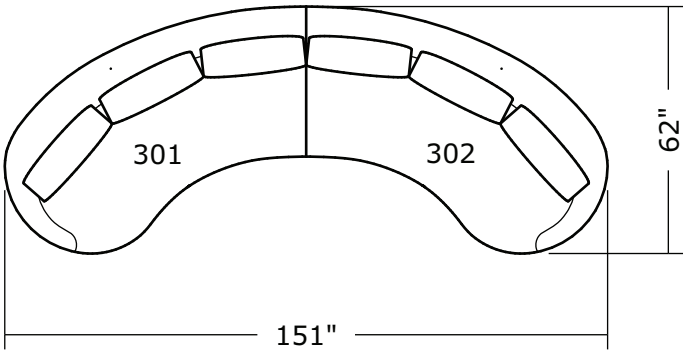

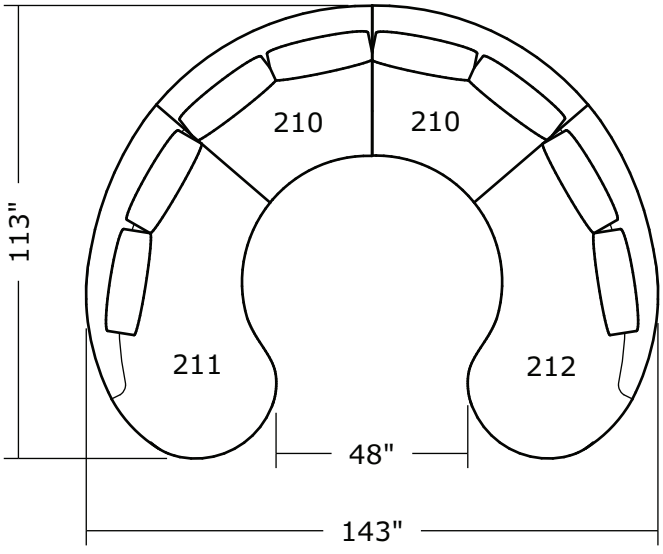

Heidi
1514 - Series

Scale 1/4" = 1'0"
All upholstery sizes are approximate